MODEL **DJ830**

- *Stainless Steel Shaft*
- *IP65 Protection*
- *CE Certified*

Specification

Model		DJ830
Input Voltage	(V DC)	12 or 24
Stroke Length	(mm)	50 to 600
Load Capacity	(N)	Max 6,000
Travel Speed	(mm/s)	8.5 to 12
Limit Switch		Integrated
Duty Cycle		25% (4 min continous moving)
IP Rating		IP65
Operating Temp.	(℃)	-40 to 65
Cable Length	(mm)	400
Signal Feedback		Hall Sensor (optional)

1. Load/ Stroke/ Speed

Code	Gear Ratio	Dynamic Load (N)	Speed (mm/s) ±10%		Current (amp)				Max. Stroke w/o Sensor (mm)	Max. Stroke w/ Hall Sensor (mm)
					12v		24v			
			Free Load	Full Load	Free Load	Full Load	Free Load	Full Load		
A	20:1	2,000	12.0	8.0	1.5	6.5	1.2	4.0	600	600
B	20:1	3,000	12.0	7.0	1.5	10.0	1.2	6.0	500	500
C	40:1	4,000	8.5	7.0	3.0	12.0	1.5	6.0	500	500
D	40:1	5,000	8.5	7.0	3.0	14.0	1.5	7.5	400	400
E	40:1	6,000	8.5	6.5	3.0	16.0	1.5	9.0	300	300

** The above data are typically made with a stable power supply and an ambient temperature.*

2. Overall Dimension

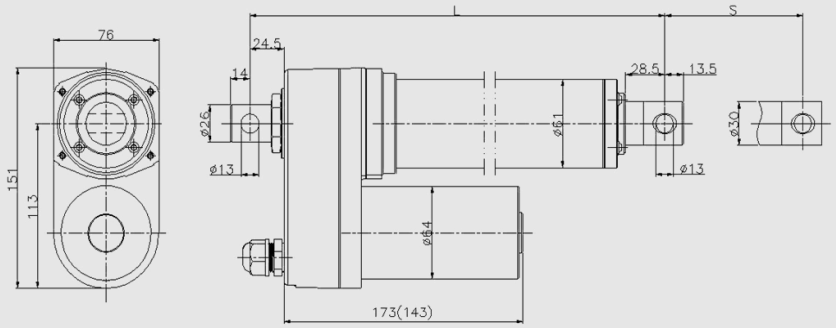

S (mm)	L (mm)	Formula
50	250	L= S+ 200 mm
100	300	
150	350	
200	400	
250	450	
300	500	
350	550	
400	600	
450	700	L= S+ 250 mm
500	750	
550	800	
600	850	

S: Stroke Length
L: Min Mounting Length

Optional Parts

1 Hall Sensor Feedback

Code	Resolution (pulse/mm)	Remark
A	16.00	a. 4 pairs of poles b. Two pulse waves with 90° ± 20° difference. 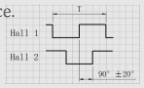
B	16.00	
C	33.07	
D	33.07	
E	33.07	

Ordering Key :

Mode	DJ830	-	Stroke	-	Voltage	-	Code	-	Sensor
Ex.	DJ830	-	300	-	24	-	B	-	H*

EX. Specification
1. max. Dynamic Load 3,000N
2. Speed 12.0 mm/sec (Free load)/ 7.0 mm/sec (Full load)
3. H- Hall Sensor *Blank- No option